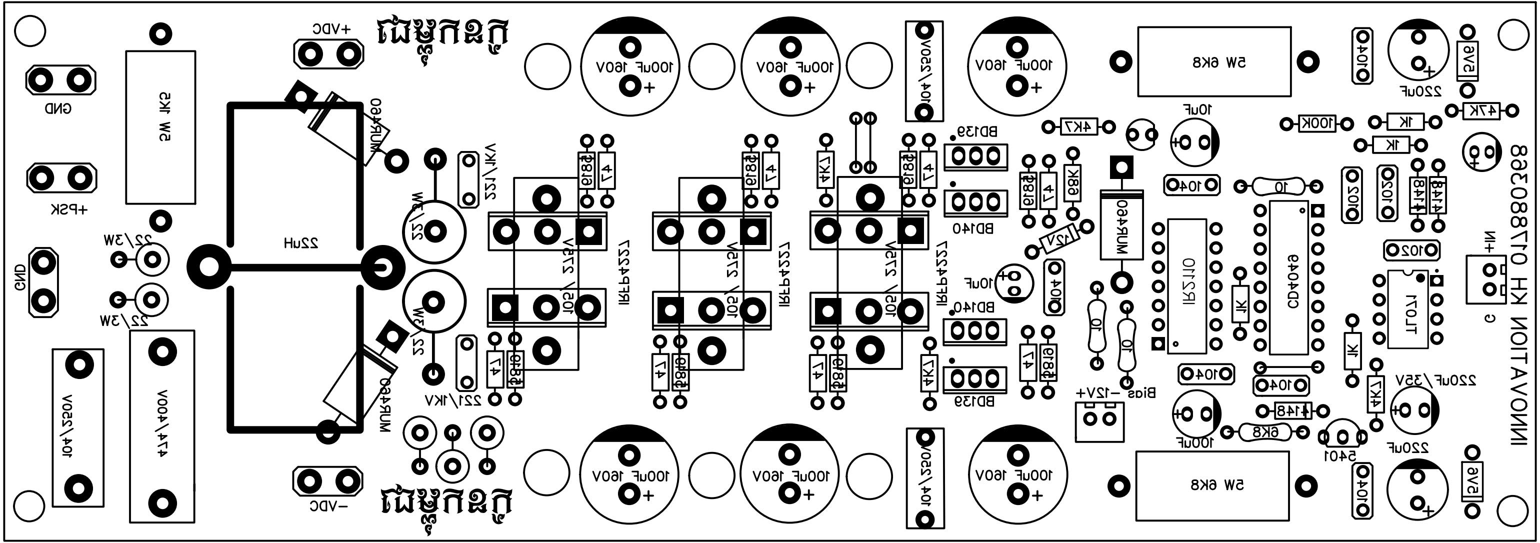
INNOVATION KH 017880368
+VDC
-VDC
GND
+PSK
5W 1K5
22uH
MUR4160
22/3W
22/1KV
IRFP4227
10/250V
BD139
BD140
100uF 160V
10/250V 104
5W 6K8
10uF
4K7
68K
12V
104
10
IR2110
CD4049
TL071
102
1K
100K
47K
220uF
5V6
4148
6K8
5401
100uF
220uF/35V
Bias
-12V+
IN+
104/250V
474/400V
4.7
8819